CELERITY GROUP, INC. PROPRIETARY INFORMATION
THIS DRAWING IS THE SOLE PROPERTY OF CELERITY GROUP, INC. AND EMBODIES A CONFIDENTIAL DESIGN. IT HAS BEEN FORWARDED TO YOU IN CONFIDENCE FOR A SPECIFIC PURPOSE AND AS A RECIPIENT YOU AGREE NOT TO USE, DISCLOSE, REPRODUCE OR COPY IT IN WHOLE OR IN PART WITHOUT THE EXPRESS WRITTEN CONSENT OF SAID CORPORATION AND TO IMMEDIATELY RETURN SAME UPON REQUEST.

REVISIONS

REV.	DESCRIPTION	EO#	DATE	ENG.	QLTY.	MFG.
A	INITIAL RELEASE	5580	09-05-2001	T.W.	M.P.I.	F.B.

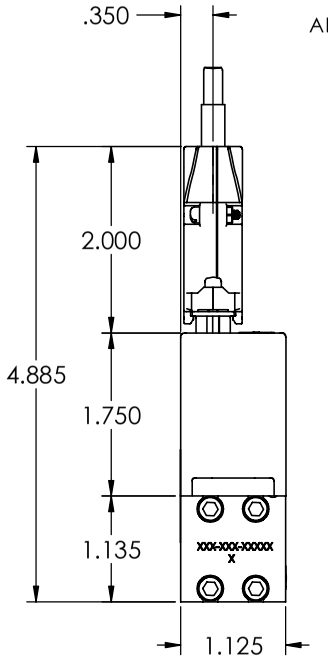

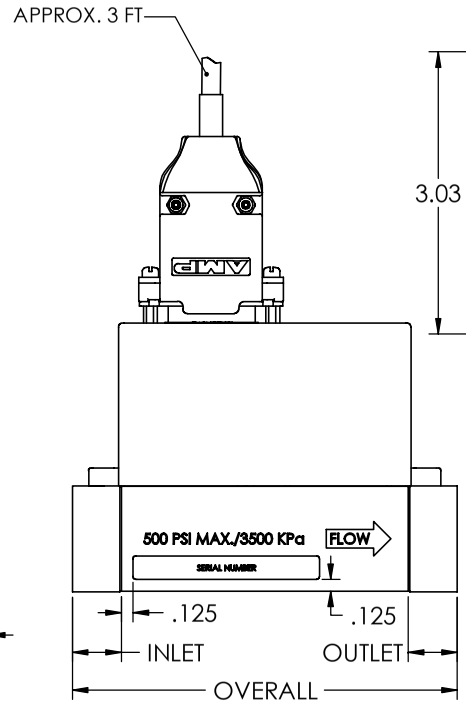

REMOTE CLAMP BRACKET

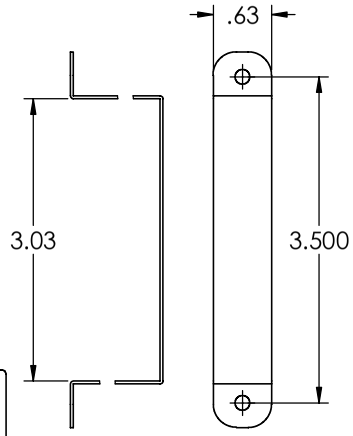

REMOTE

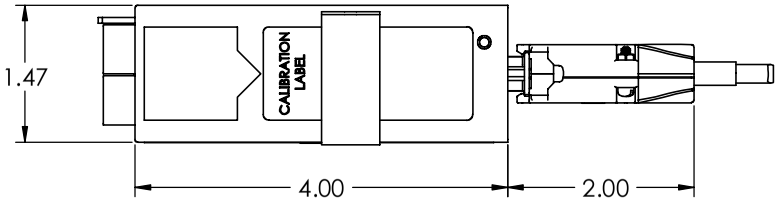

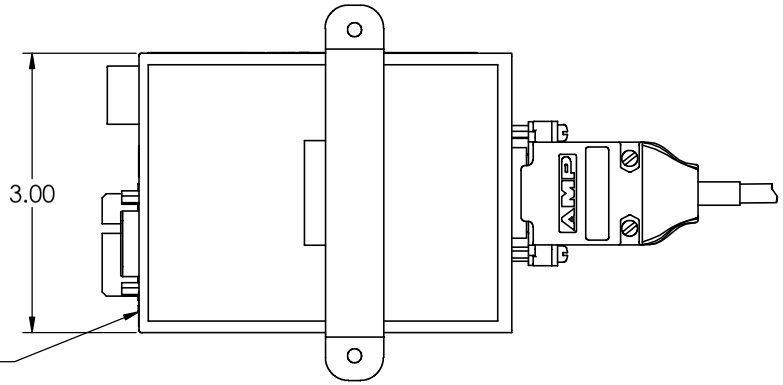

TOP LABEL INCLUDES MODEL, RANGE, GAS, S/N & ZERO ACCESS.

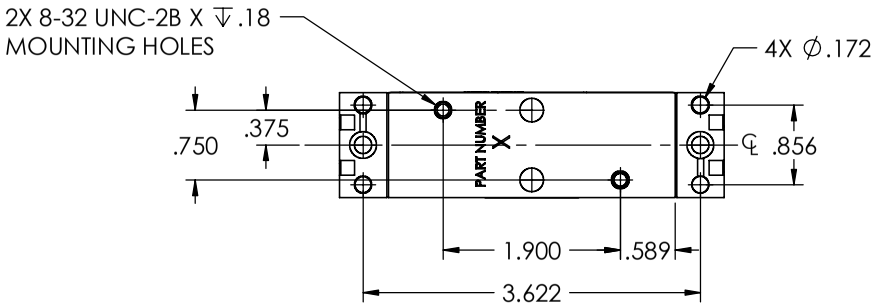

FITTING TYPE	CODE	OVERALL	INLET	OUTLET	WIDTH	MODEL(S)
DOWNPORT "C" BORE	DB	4.13	0.526	0.526	1.13	961
DOWNPORT "W" SEAL	DW	4.13	0.526	0.526	1.13	961

1. PRODUCT DESCRIPTION CODE IS SPECIFIED PER DRAWING NO. 990-111-0001.

NOTES: UNLESS OTHERWISE SPECIFIED.

PART NO.	UNLESS OTHERWISE SPECIFIED DIMENSIONS ARE IN INCHES DECIMALS .XX± .01 DECIMALS .XXX± .005 ANGLES ± 1∞		CELERITY 22600 Savi Ranch Pkwy. Yorba Linda, CA 92887
SOLIDWORKS NO. D9561	BREAK SHARP EDGES R.005		UFC/UFM-9561 ANALOG DIGITAL
USED ON	DRAWN: S. HUANG	DATE: 03-27-01	
	ENGINEERING: T.W.	09-05-01	SIZE B / SCALE 0.75:1 / DRAWING NO. 990-111-9561 / REV. A
MATERIAL	QUALITY: M.P.I.	09-05-01	
INTERPRET DRAWING PER ANSI Y 14.5M - 1994	MANUFACTURING: F.B.	09-05-01	DO NOT SCALE DRAWING / SHEET 1 OF 1